LEFOO

LFP200-400G

230V AC Diaphragm Booster Pump (Normal Size Series)

Connectors

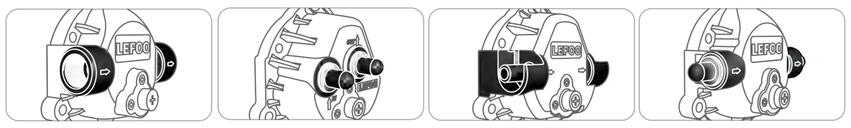

3/8"NPT | 3/8″ Top female quick connector | 3/8″ Male quick connector | 5/16、3/8″ Side female quick connector

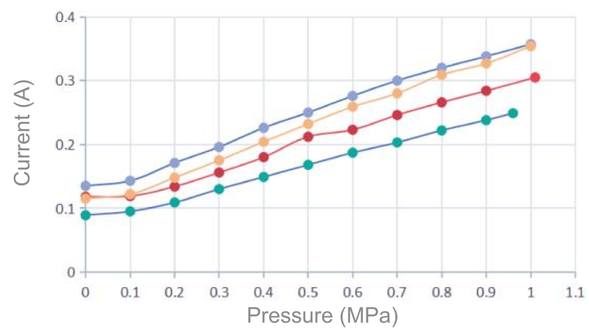

Current Curve

- LFP6200W
- LFP6300W-A
- LFP6300W
- LFP6400W

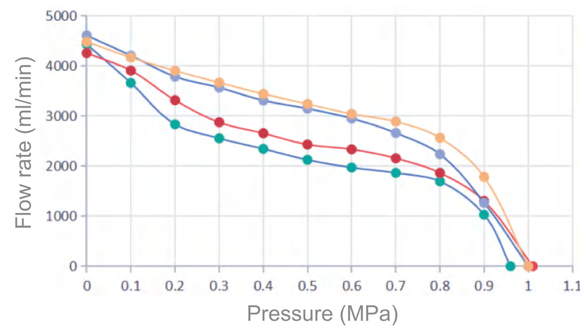

Flow Curve

- LFP6200W
- LFP6300W-A
- LFP6300W
- LFP6400W

Product Parameters

Model	Voltage	Inlet Pressure	Working Pressure	Working Current	Working Flow	Open Flow	Bypass Pressure	Maximum Current	Self-priming Height
LFP6200W	AC 230V	0.2MPa	0.5MPa	≤0.23A	≥1900mL/min	≥2500mL/min	0.85-1.0MPa	≤0.35A	≥1.0m
LFP6300W-A	AC 230V	0.2MPa	0.5MPa	≤0.26A	≥2200mL/min	≥3000mL/min	0.85-1.0MPa	≤0.38A	≥1.0m
LFP6300W	AC 230V	0.2MPa	0.5MPa	≤0.28A	≥2700mL/min	≥3500mL/min	0.85-1.0MPa	≤0.40A	≥1.0m
LFP6400W	AC 230V	0.2MPa	0.5MPa	≤0.30A	≥2950mL/min	≥4000mL/min	0.85-1.0MPa	≤0.45A	≥1.0m

Product Dimensions (mm)

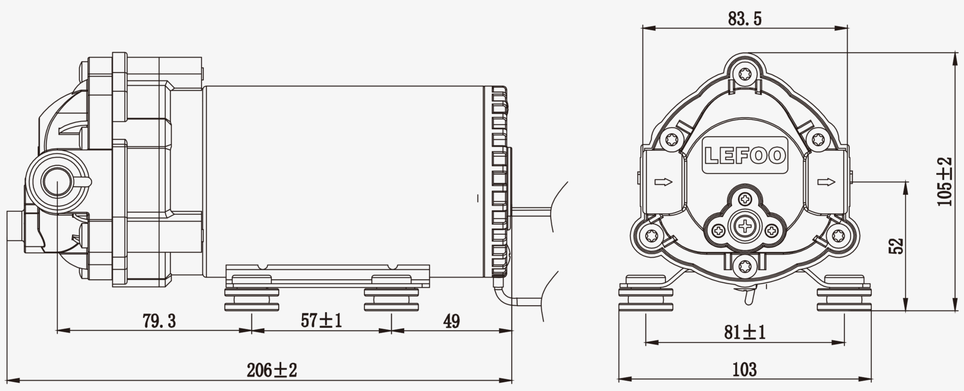

LFP6200W\6300W-A\6300W(3/8″NPT)

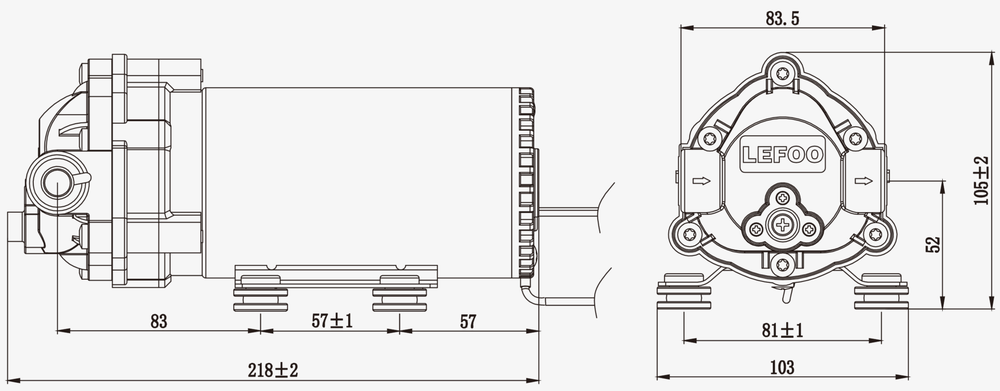

LFP6400W(3/8″NPT)

LFP500-800G

230V AC Diaphragm Booster Pump
(Normal Size Series)

Connectors

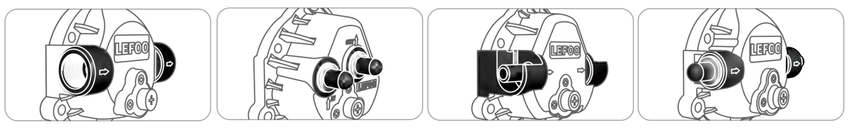

3/8"NPT | 3/8″ Top female quick connector | 3/8″ Male quick connector | 5/16、3/8″ Side female quick connector

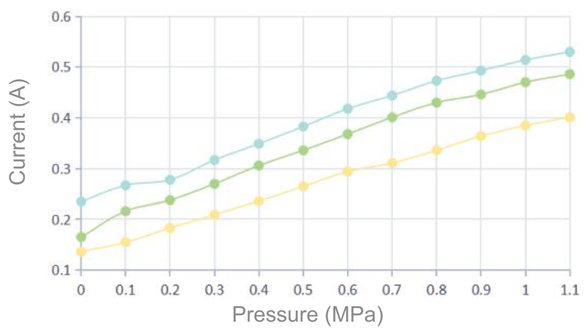

Current Curve

LFP6500W
LFP6600W
LFP6800W

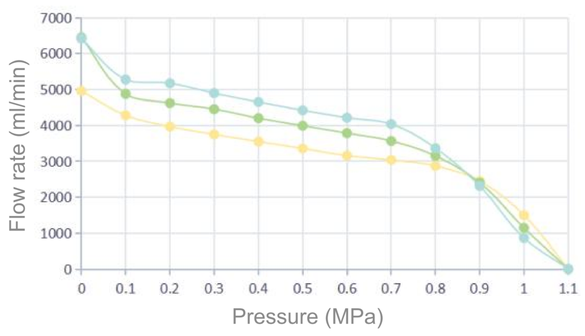

Flow Curve

LFP6500W
LFP6600W
LFP6800W

Product Parameters

Model	Voltage	Inlet Pressure	Working Pressure	Working Current	Working Flow	Open Flow	Bypass Pressure	Maximum Current	Self-priming Height
LFP6500W	AC 230V	0.2MPa	0.5MPa	≤0.34A	≥3250mL/min	≥4800mL/min	1.05-1.20MPa	≤0.53A	≥1.0m
			0.7MPa	≤0.39A	≥2800mL/min				
LFP6600W	AC 230V	0.2MPa	0.5MPa	≤0.39A	≥3600mL/min	≥5000mL/min	1.05-1.20MPa	≤0.57A	≥1.0m
			0.7MPa	≤0.43A	≥3200mL/min				
LFP6800W	AC 230V	0.2MPa	0.5MPa	≤0.50A	≥4000mL/min	≥6000mL/min	1.05-1.20MPa	≤0.80A	≥1.0m
			0.7MPa	≤0.55A	≥3600mL/min				

Product Dimensions (mm)

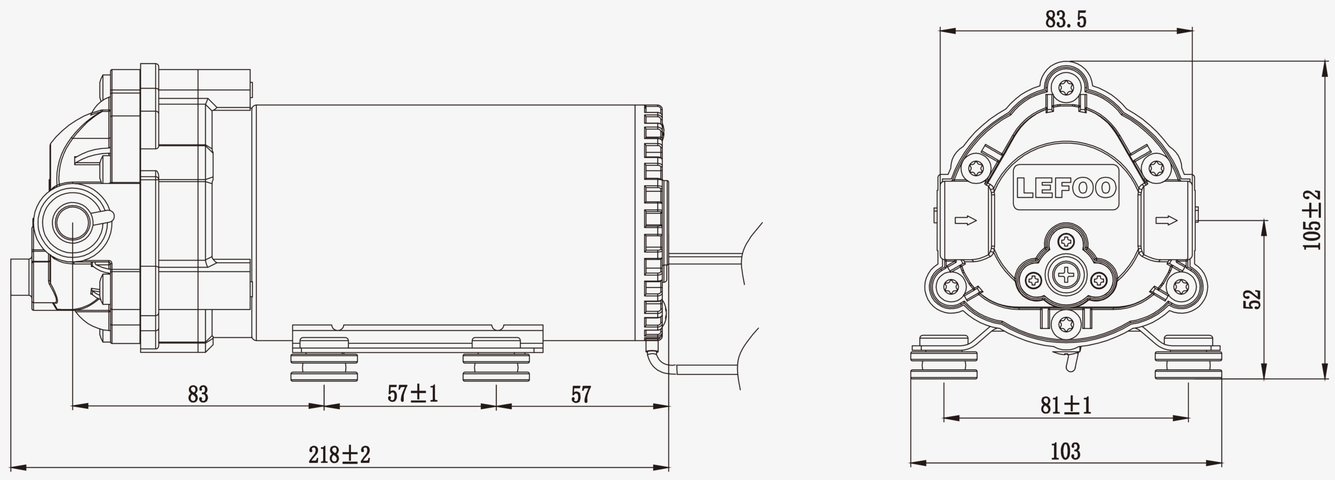

LFP6500W\6600W\6800W(3/8″NPT)