LEFOO

LFP1000-1200G

BLDC Diaphragm
Booster Pump Series

Connectors

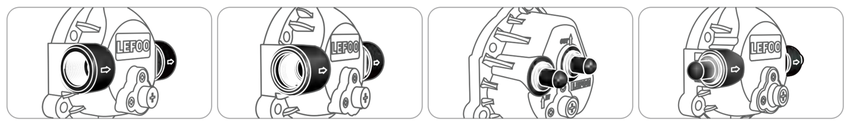

3/8"NPT | 3/8"NPT"0" | 3/8″ Top female quick connector | 1/4″、3/8″ Side female quick connector

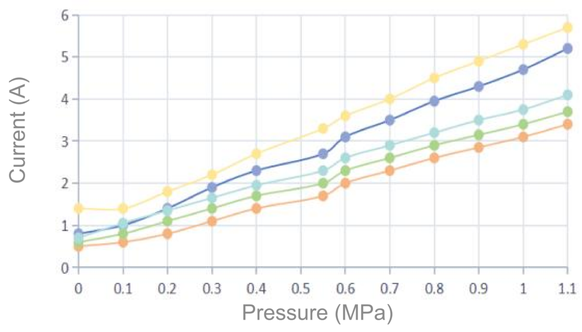

Current Curve

- LFP11000W-B
- LFP21000W-B
- LFP11000W(A)-B
- LFP21000W(A)-B
- LFP21200W-B

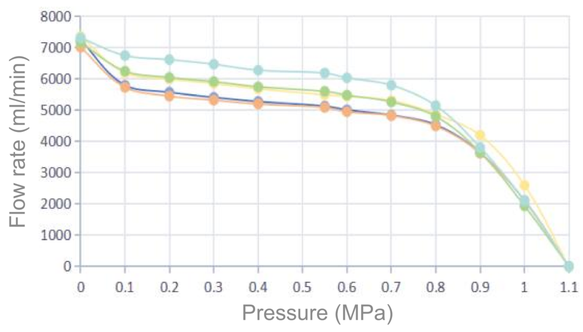

Flow Curve

- LFP11000W-B
- LFP21000W-B
- LFP11000W(A)-B
- LFP21000W(A)-B
- LFP21200W-B

Product Parameters

Model	Voltage	Inlet Pressure	Working Pressure	Working Current	Working Flow	Open Flow	Bypass Pressure	Maximum Current
LFP11000W-B	DC 24V	0.2MPa	0.55MPa	≤3.5A	≥4500mL/min	≥6000mL/min	0.9-1.1MPa	≤5.8A
LFP21000W-B	DC 36V	0.2MPa	0.55MPa	≤2.4A	≥4500mL/min	≥6000mL/min	0.9-1.1MPa	≤4.0A
LFP11000W(A)-B	DC 24V	0.2MPa	0.55MPa	≤4.0A	≥5000mL/min	≥6000mL/min	0.9-1.1MPa	≤6.0A
LFP21000W(A)-B	DC 36V	0.2MPa	0.55MPa	≤2.5A	≥5000mL/min	≥6000mL/min	0.9-1.1MPa	≤4.5A
LFP21200W-B	DC 36V	0.2MPa	0.55MPa	≤2.8A	≥5500mL/min	≥6500mL/min	0.9-1.1MPa	≤4.8A

Product Dimensions (mm)

BMC Brushless DC Diaphragm Booster Series			Protection Function
Wiring	Lead color	Features	1.Over-current protection 2.Over-voltage protection 3.Under-voltage protection 4.Phase loss protection 5.Overload protection 6.Over- temperature protection 7.Power protection 8.Locked-rotor protection
+	Red	Positive	
−	Black	Negative	
		Optional (Speed adjustable model)	
FG	Yellow	Speed, Fault pulse output	
VSP/PWM	Blue	DC0~5V, PWM(1KHz): Speed control terminal: DC 0~5V, PWM (1KHz)	

Wiring and protection functions

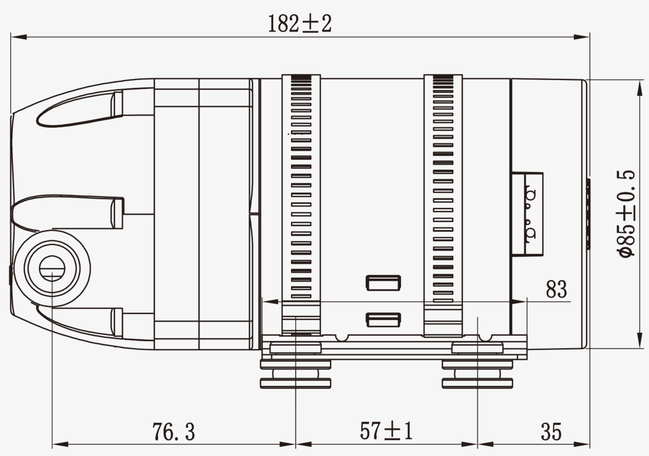

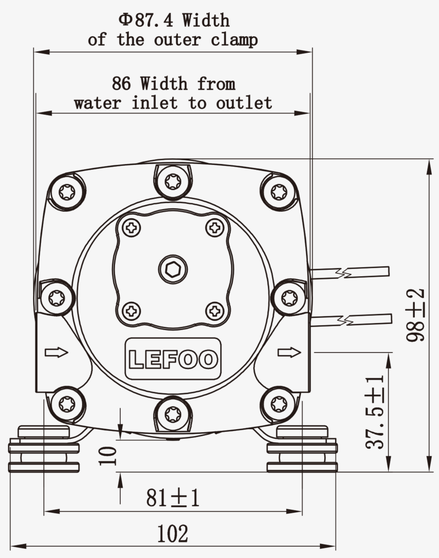

3/8"NPT"0"