LFP600-800G BLDC Diaphragm Booster Pump Series

Connectors

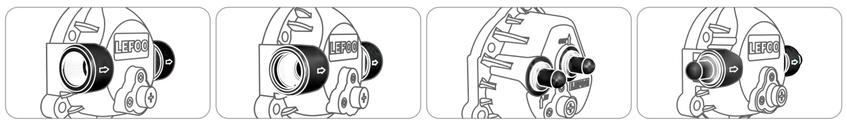

3/8"NPT | 3/8"NPT"0" | 3/8" Top female quick connector | 1/4"、3/8" Side female quick connector

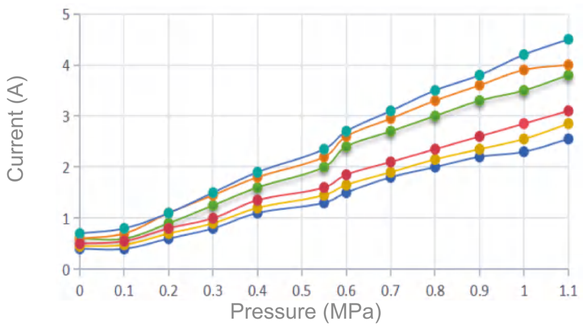

Current Curve

- LFP1600W-B
- LFP2600W-B
- LFP1600W(A)-B
- LFP2600W(A)-B
- LFP1800W-B
- LFP2800W-B

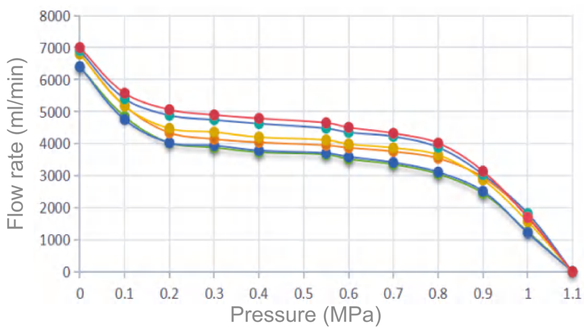

Flow Curve

- LFP1600W-B
- LFP2600W-B
- LFP1600W(A)-B
- LFP2600W(A)-B
- LFP1800W-B
- LFP2800W-B

Product Parameters

Model	Voltage	Inlet Pressure	Working Pressure	Working Current	Working Flow	Open Flow	Bypass Pressure	Maximum Current
LFP1600W-B	DC 24V	0.2MPa	0.55MPa	≤2.5A	≥3200mL/min	≥5000mL/min	0.9-1.1MPa	≤4.0A
LFP2600W-B	DC 36V	0.2MPa	0.55MPa	≤1.8A	≥3200mL/min	≥5000mL/min	0.9-1.1MPa	≤2.8A
LFP1600W(A)-B	DC 24V	0.2MPa	0.55MPa	≤2.7A	≥3500mL/min	≥5500mL/min	0.9-1.1MPa	≤4.5A
LFP2600W(A)-B	DC 36V	0.2MPa	0.55MPa	≤2.0A	≥3500mL/min	≥5500mL/min	0.9-1.1MPa	≤3.2A
LFP1800W-B	DC 24V	0.2MPa	0.55MPa	≤3.0A	≥4000mL/min	≥6000mL/min	0.9-1.1MPa	≤4.8A
LFP2800W-B	DC 36V	0.2MPa	0.55MPa	≤2.2A	≥4000mL/min	≥6000mL/min	0.9-1.1MPa	≤3.5A

Product Dimensions (mm)

BMC Brushless DC Diaphragm Booster Series			Protection Function
Wiring	Lead color	Features	1.Over-current protection 2.Over-voltage protection 3.Under-voltage protection 4.Phase loss protection 5.Overload protection 6.Over- temperature protection 7.Power protection 8.Locked-rotor protection
+	Red	Positive	
−	Black	Negative	
		Optional (Speed adjustable model)	
FG	Yellow	Speed, Fault pulse output	
VSP/PWM	Blue	DC0~5V, PWM(1KHz): Speed control terminal: DC 0~5V, PWM (1KHz)	

Wiring and protection functions

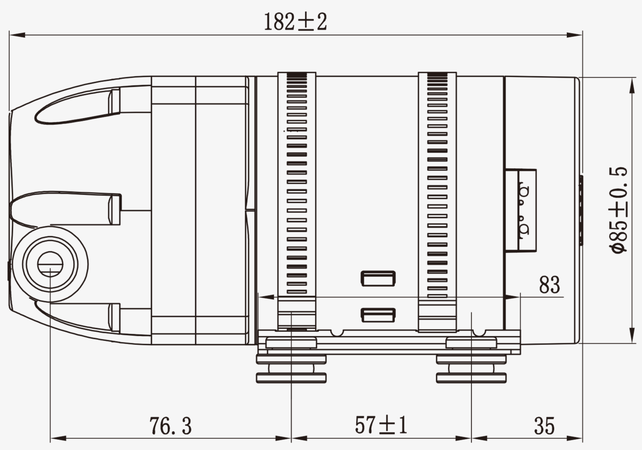

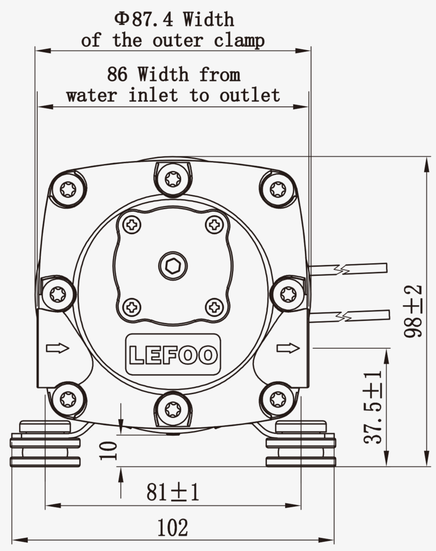

3/8"NPT"0"